Sicce Micra Water Pump 400lt/h 10m cable Tripolar Outdoor

Sicce Micra Water Pump 400lt/h 10m cable Tripolar Outdoor

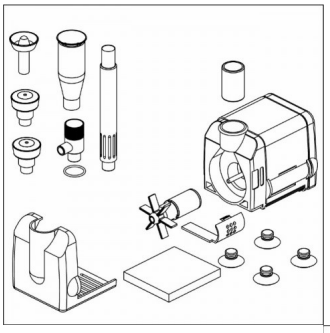

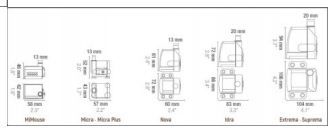

?????? ????? ???????? ????????? 400lt/h ?? ??????? 10m.

??????????: ??? ??????????? ?????
????
???? ?? ??????? 32,26 €

???? ??????? ?? ???????

?????? ?? ??? ???????? ??????? ?? ?? ?????? ?