Sicce Extrema Water Pump 2500lt/h 1,5m cable

Sicce Extrema Water Pump 2500lt/h 1,5m cable

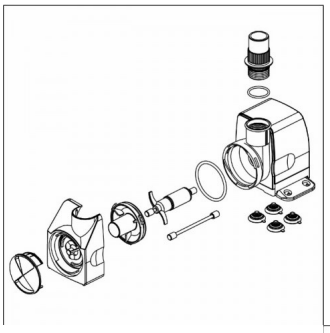

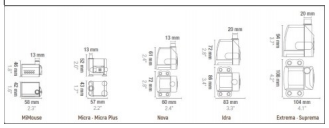

?????? ????? ???????? ????????? 2500lt/h.

??????????: ??? ??????????? ?????
????
???? ?? ??????? 40,32 €

???? ??????? ?? ???????

?????? ?? ??? ???????? ??????? ?? ?? ?????? ?